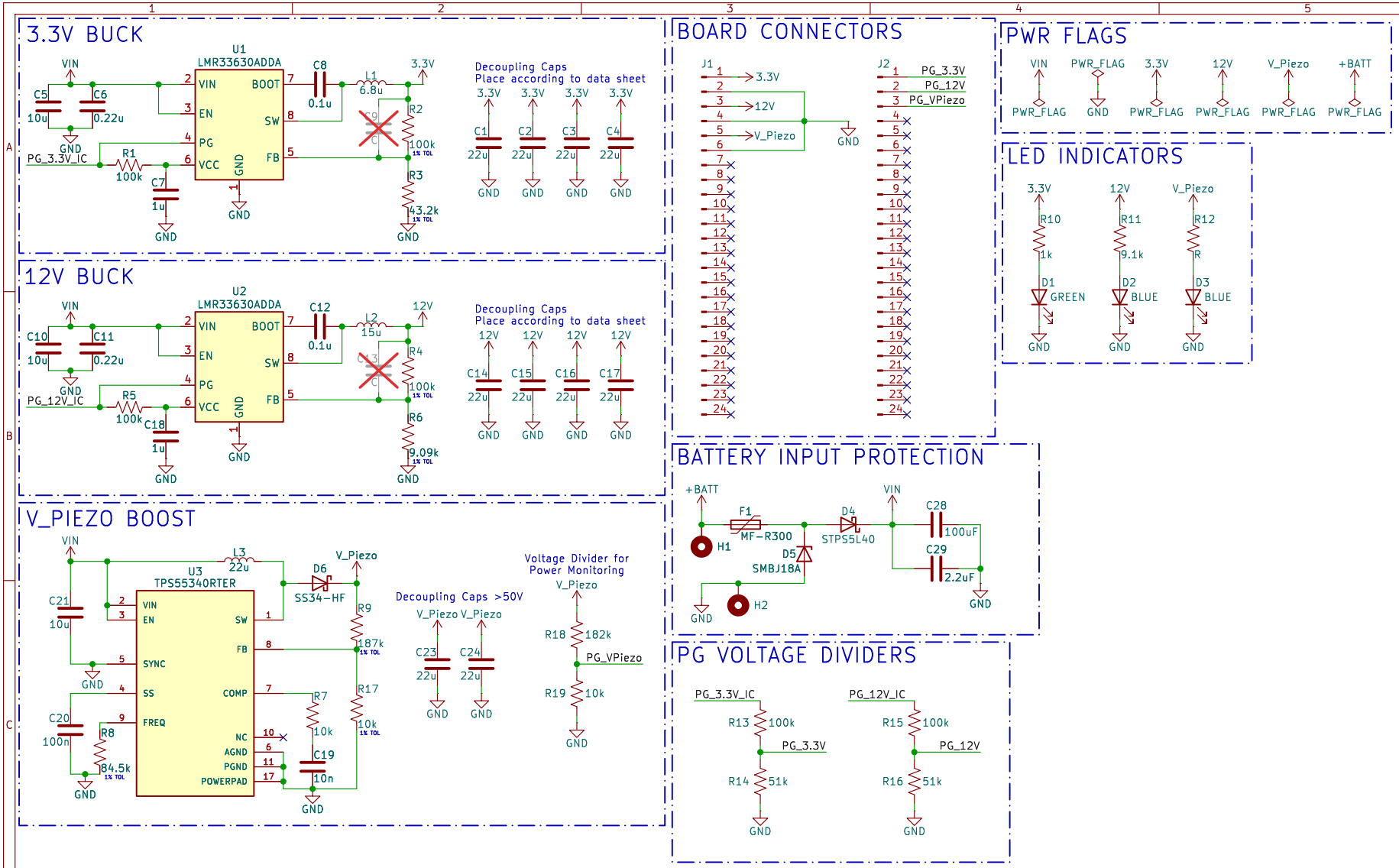

By Samantha Chong
CAPSTONE

Sheet: /
File: PWR.kicad_sch

Title: SWARM PWR BOARD

Size: A4	Date: 2026-04-15	**Rev: 1.2**
KiCad E.D.A. 9.0.6		Id: 1/1